KB5610,1,2,3,5,6,7,8PL,PLAC
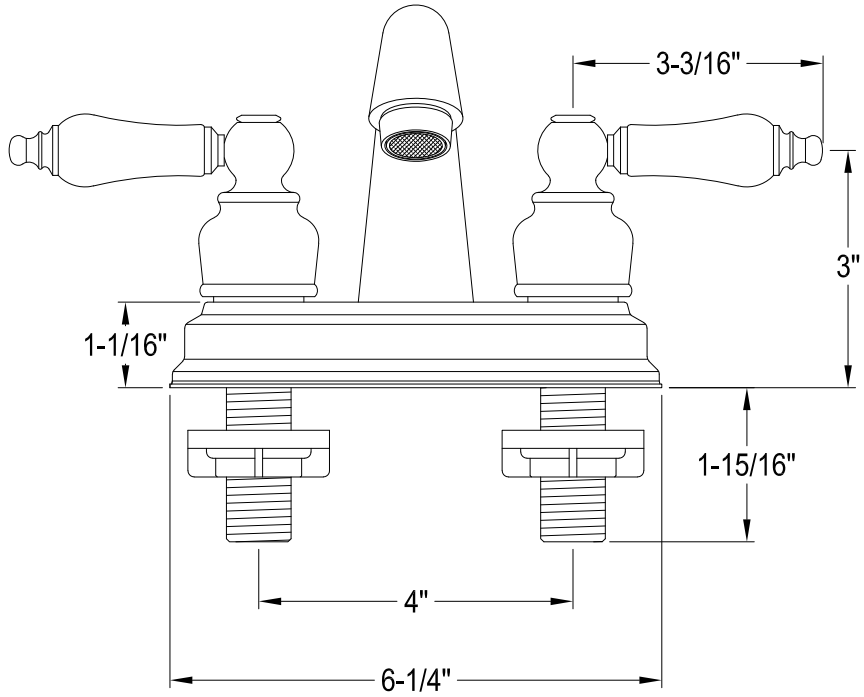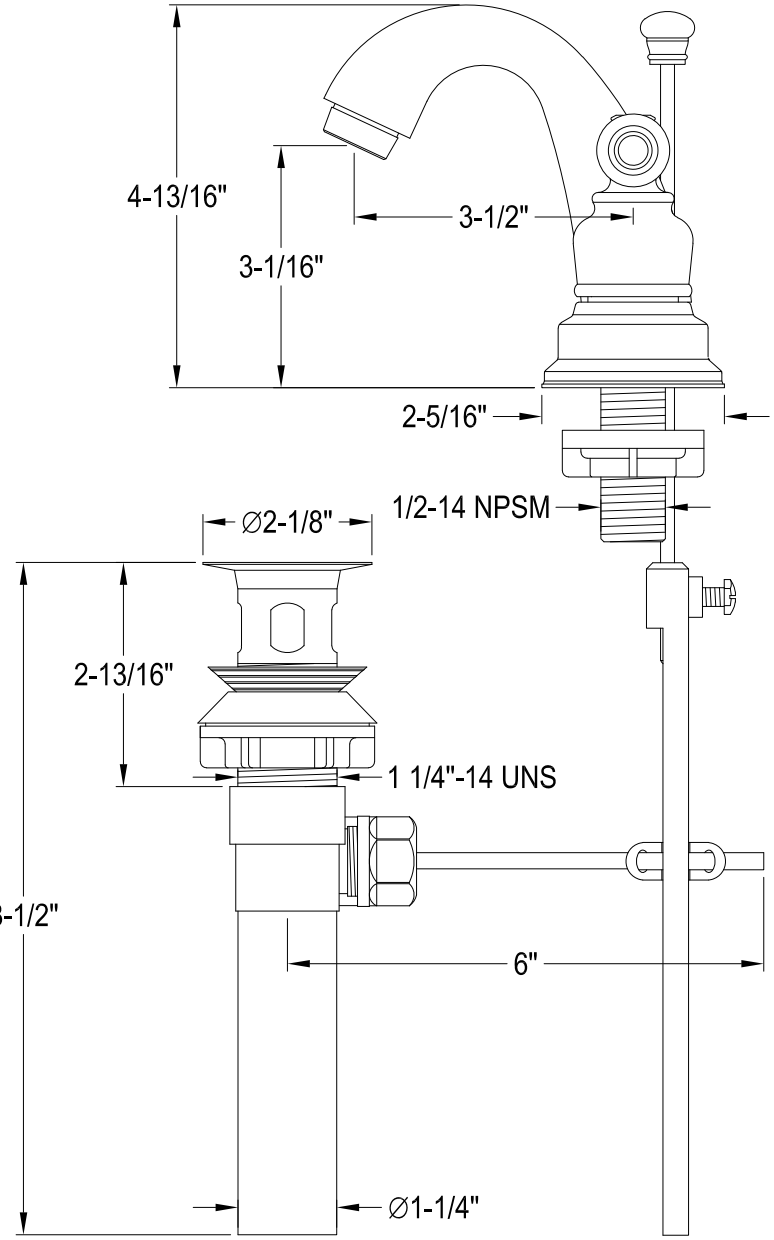
Twin Handles 4" Centerset Lavatory Faucet With Retail Pop-Up